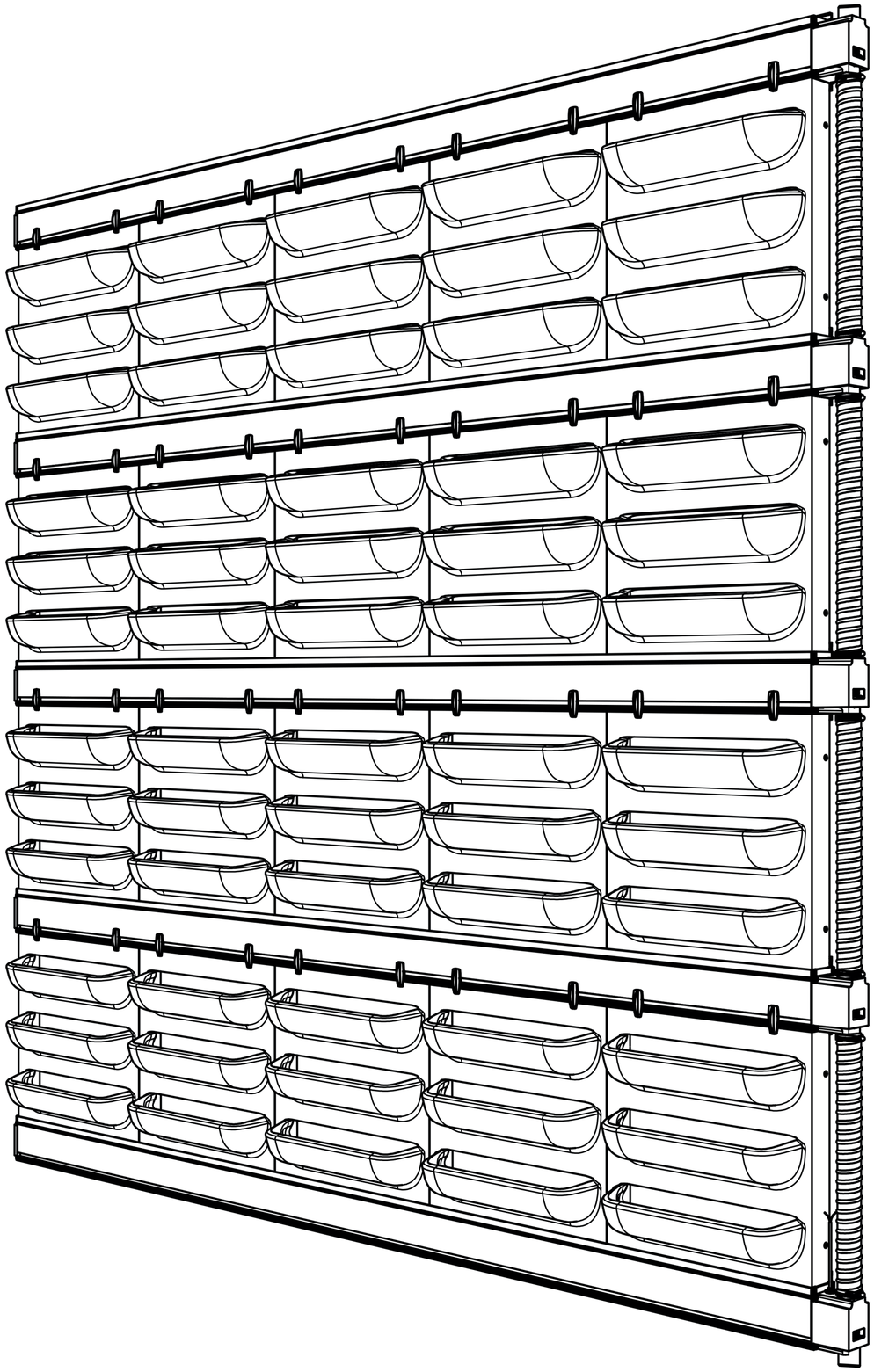

MOBILANE
BUILDING GREEN

LivePanel®

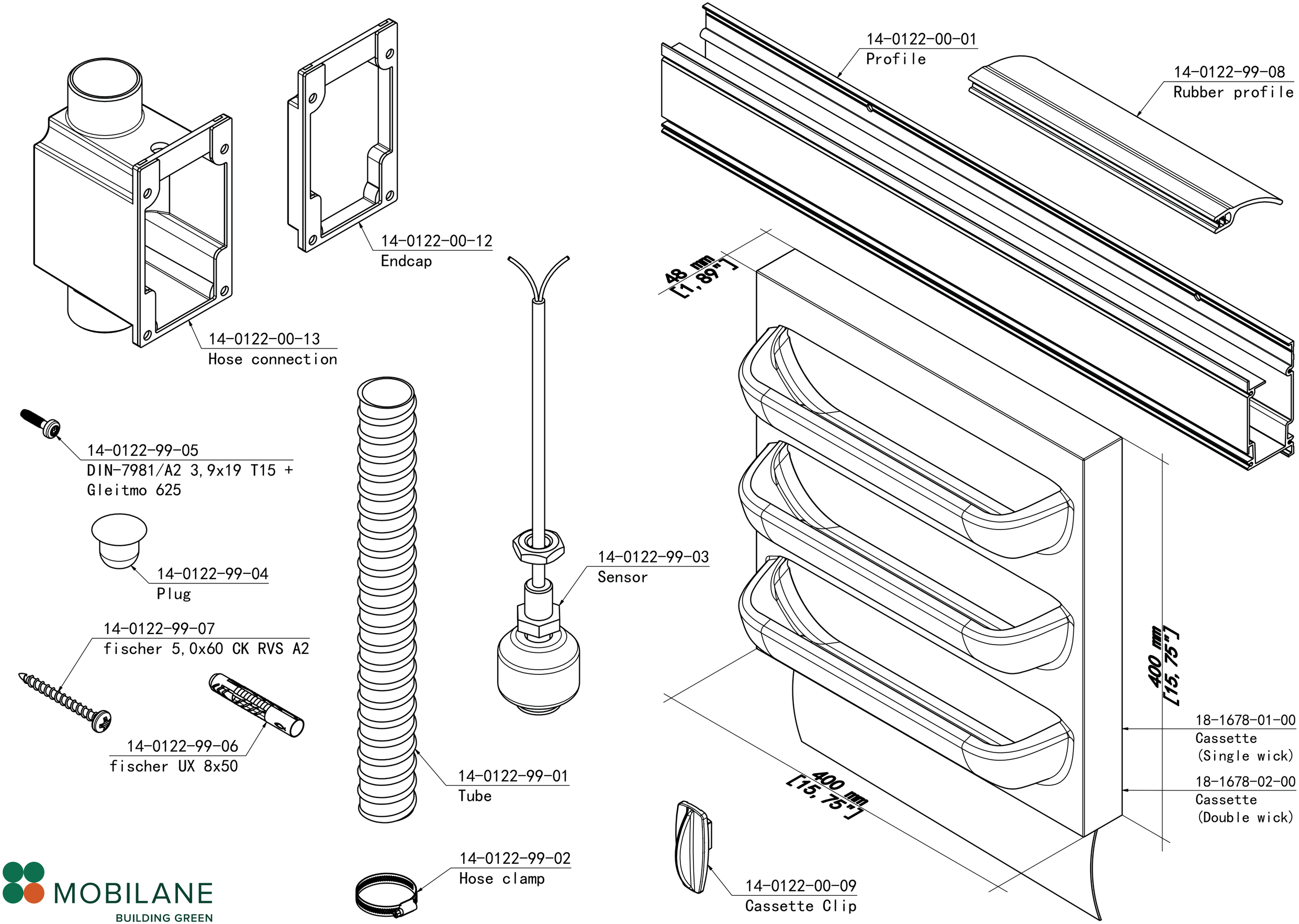

MOBILANE
BUILDING GREEN

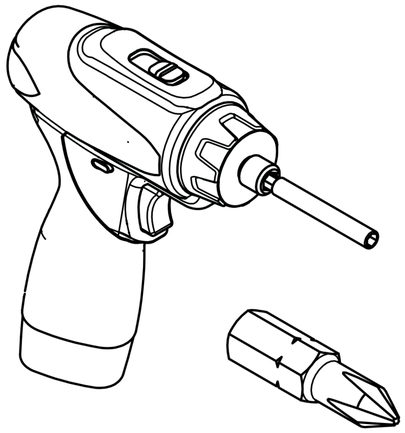

PZ2

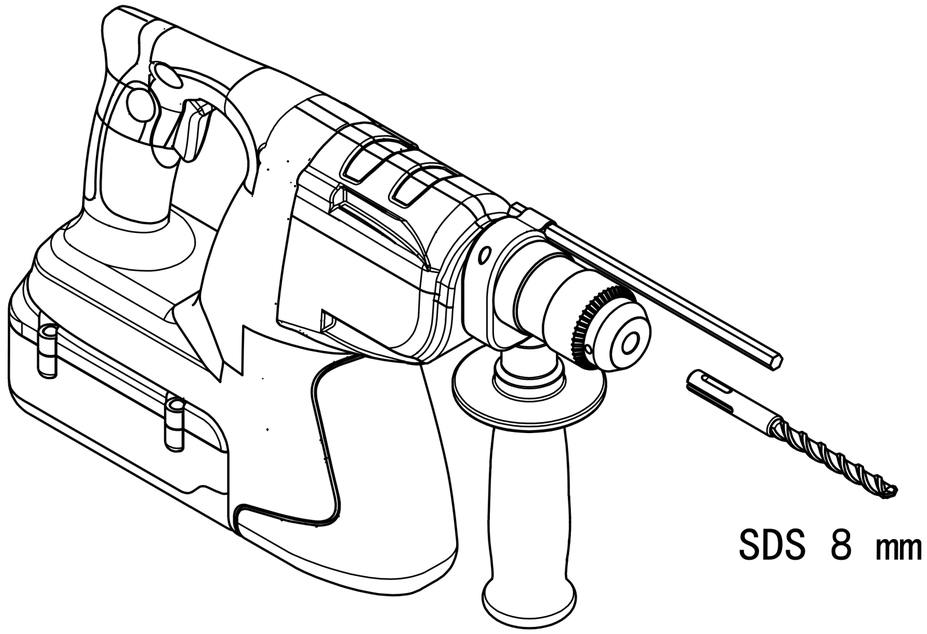

SDS 8 mm [5/16"]

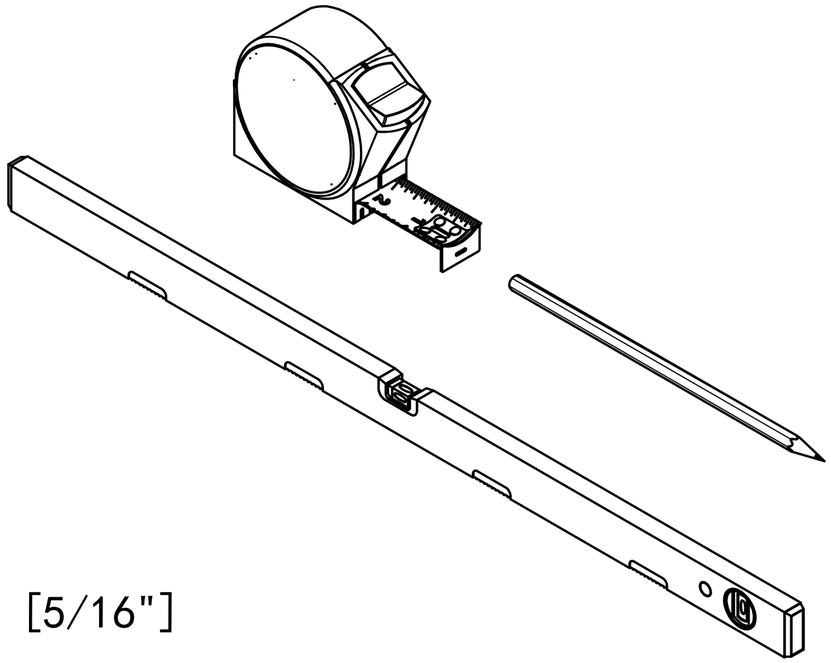

SOCKET 7 mm [1/4"]

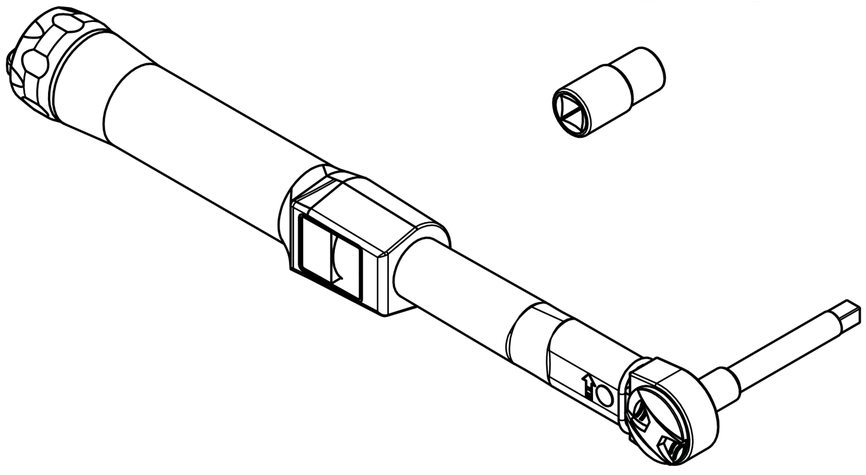

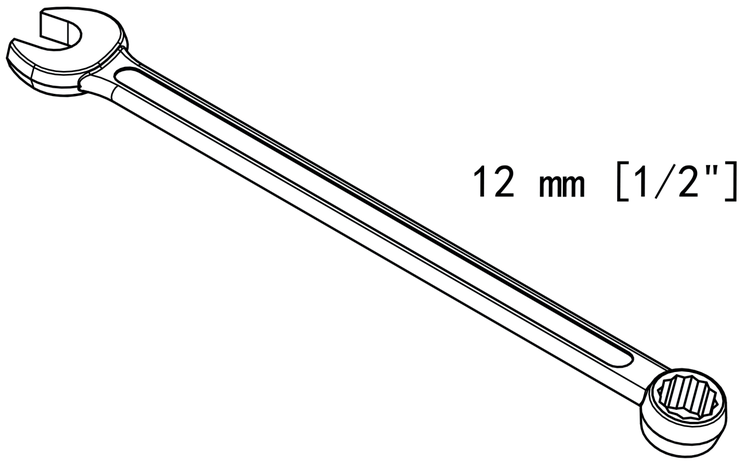

12 mm [1/2"]

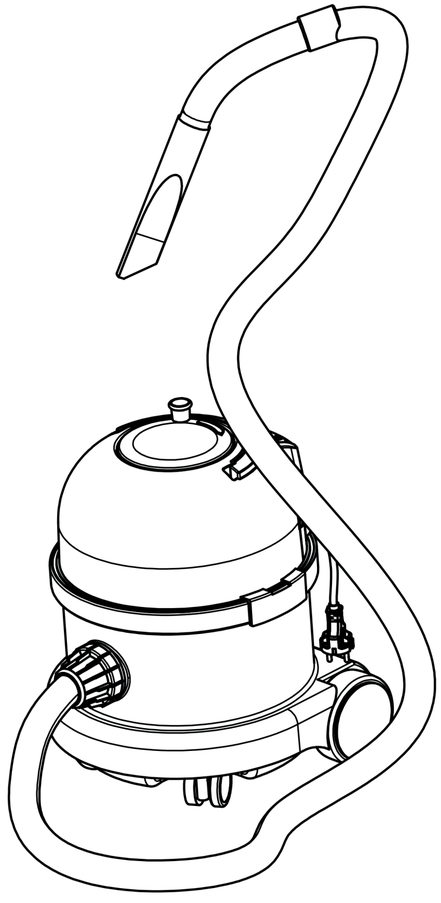

MOBILANE
BUILDING GREEN

1 (ONLY FOR AUTOMATIC IRRIGATION SYSTEM)

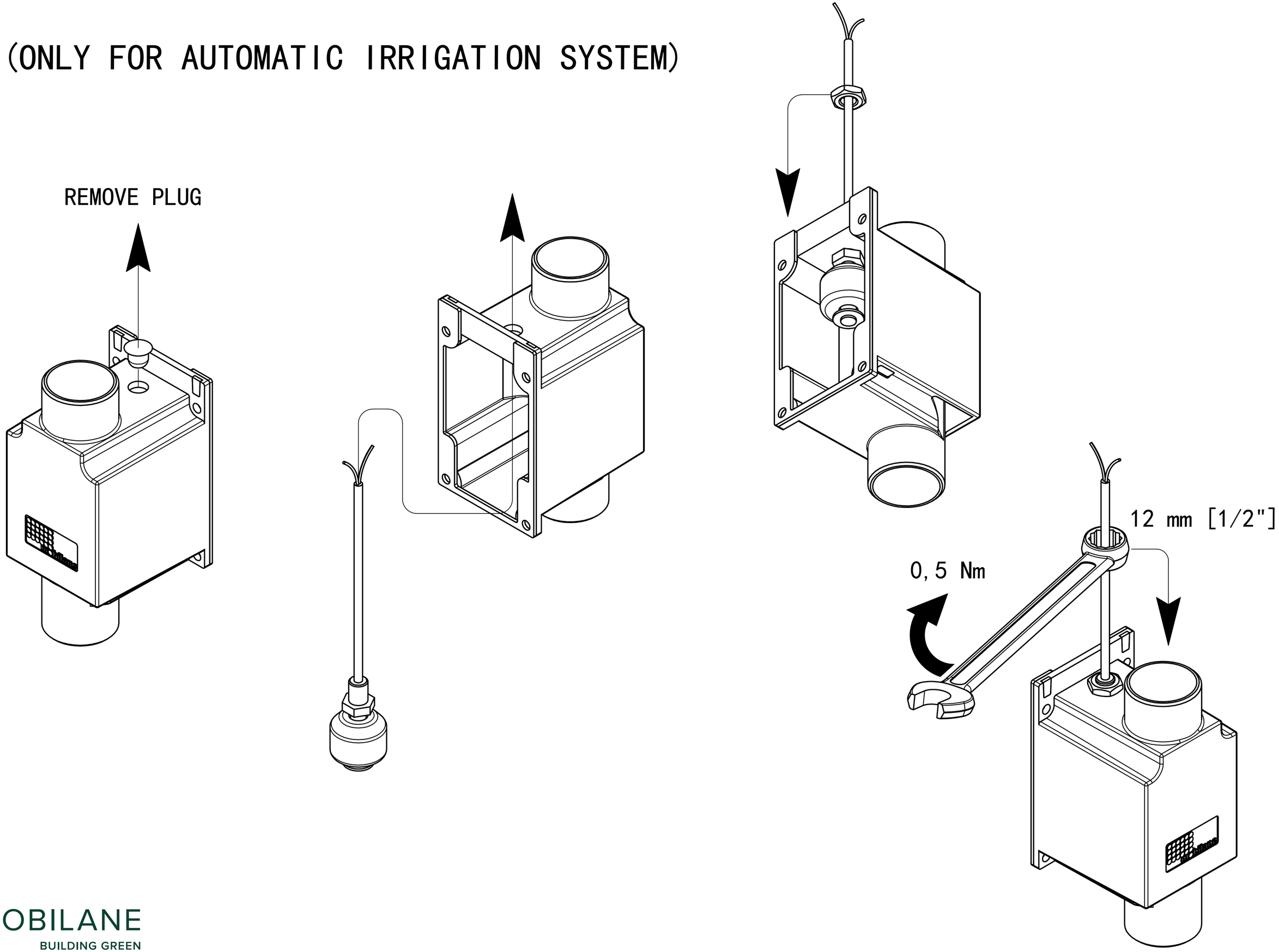

MOBILANE
BUILDING GREEN

2 When LivePanel is being installed outdoor, at a height above 10 meters [33 ft] from groundlevel, please contact Mobilane.

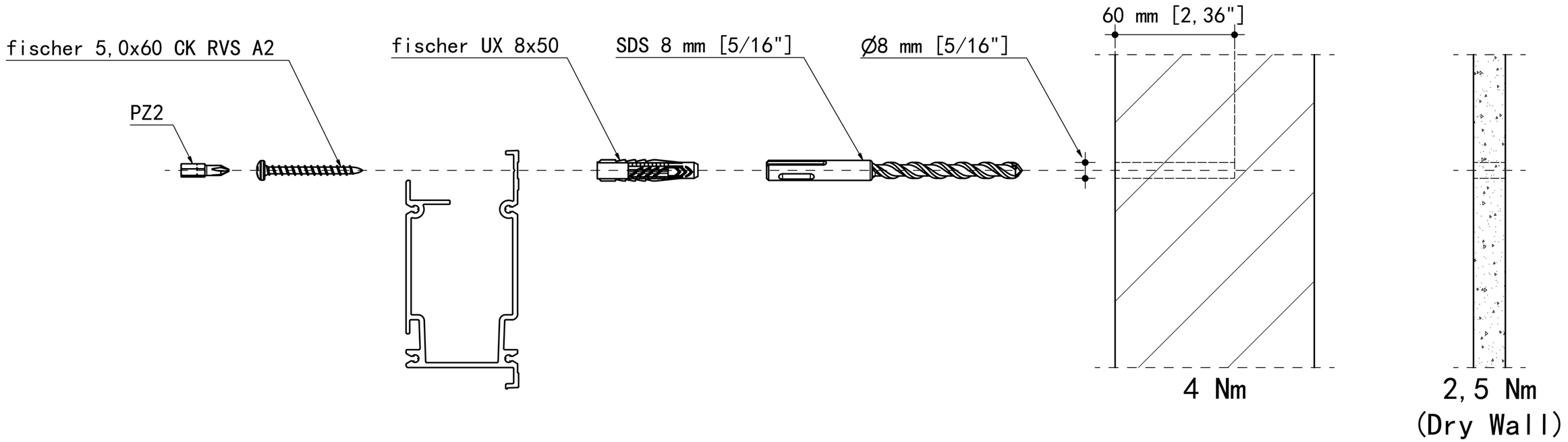

FOR DRILL PATTERN
SEE PROJECT DRAWING

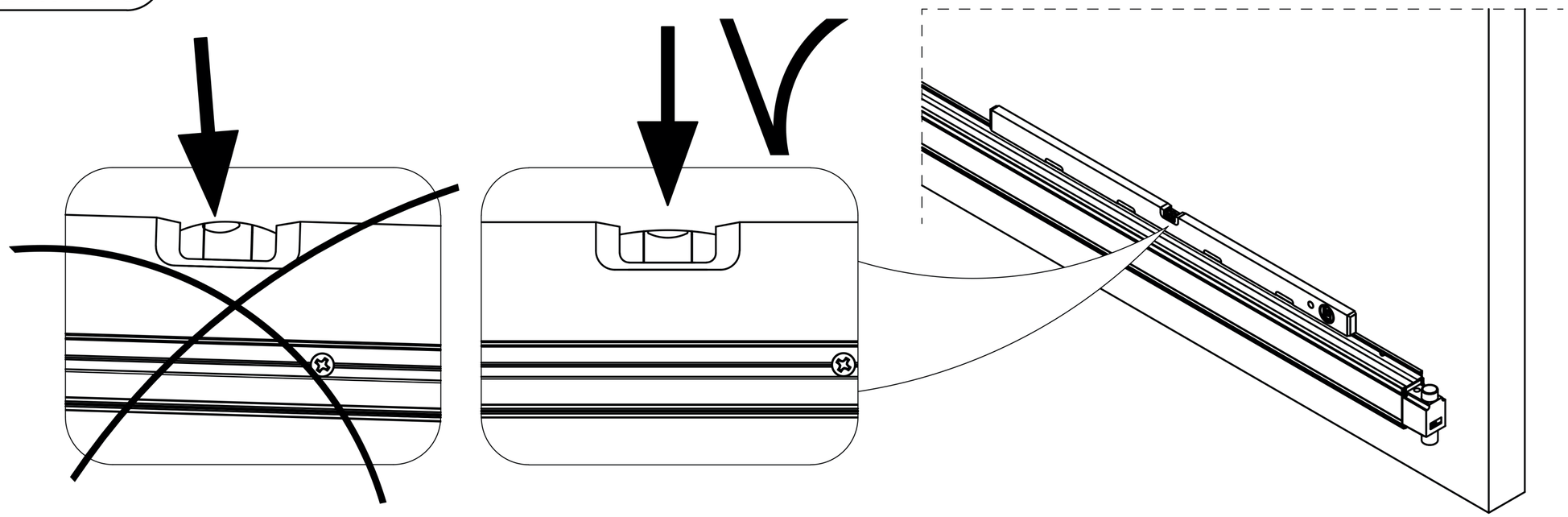

MOBILANE
BUILDING GREEN

3

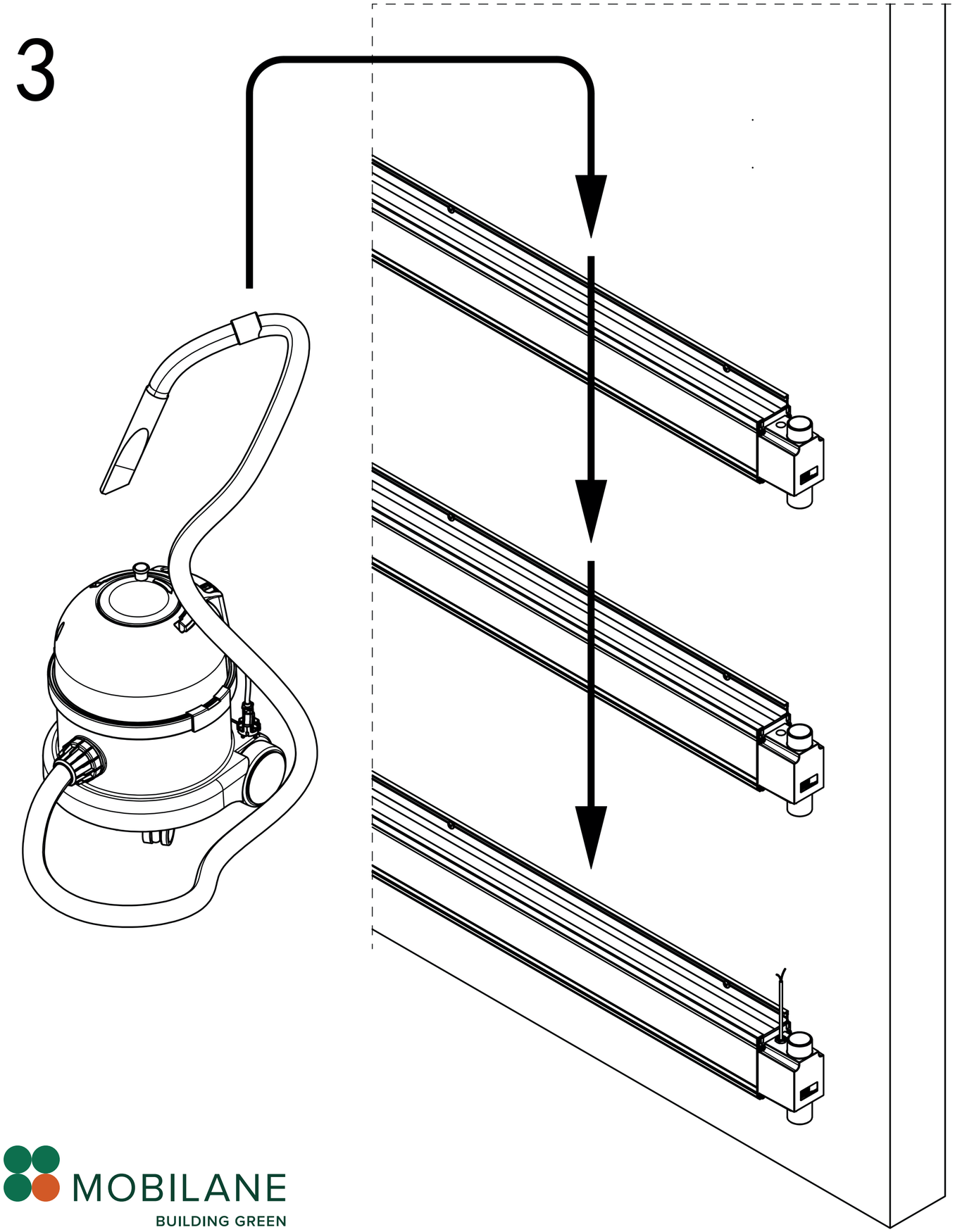

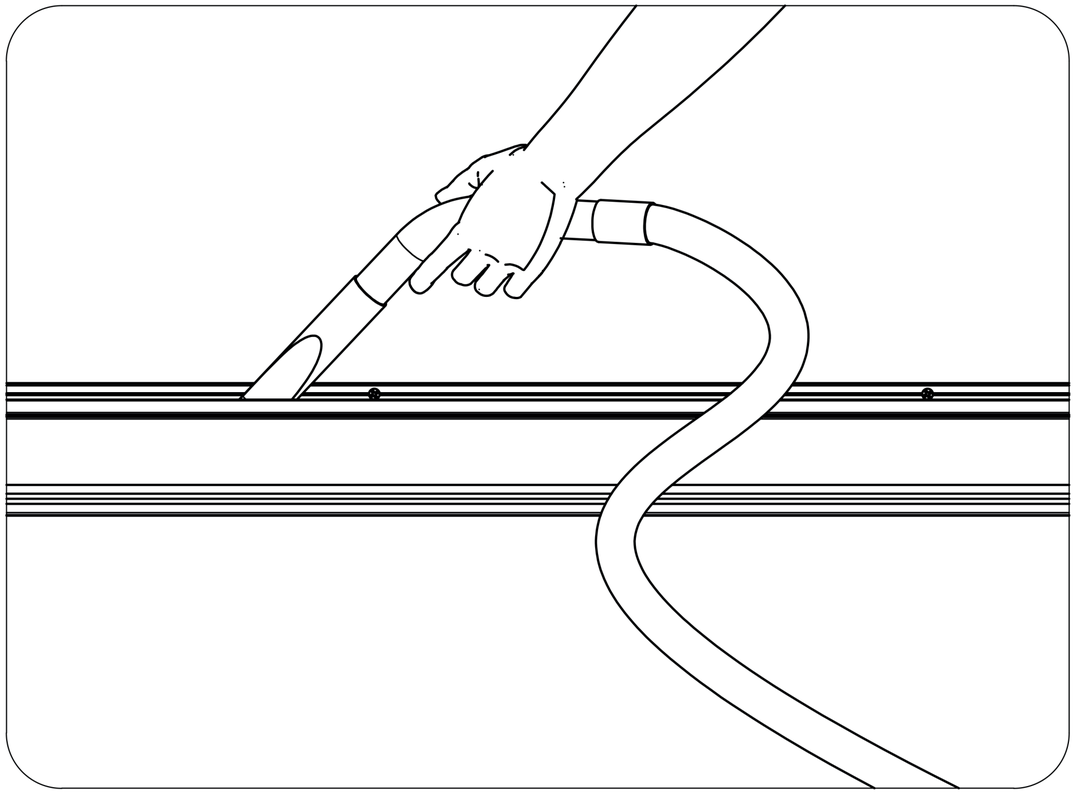

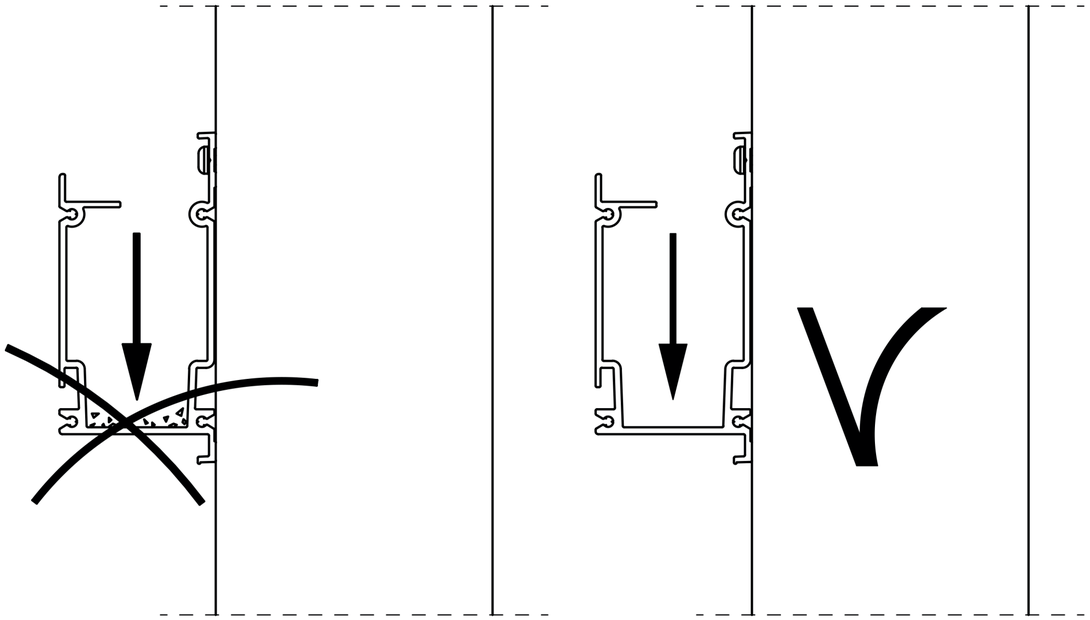

MOBILANE
BUILDING GREEN

4

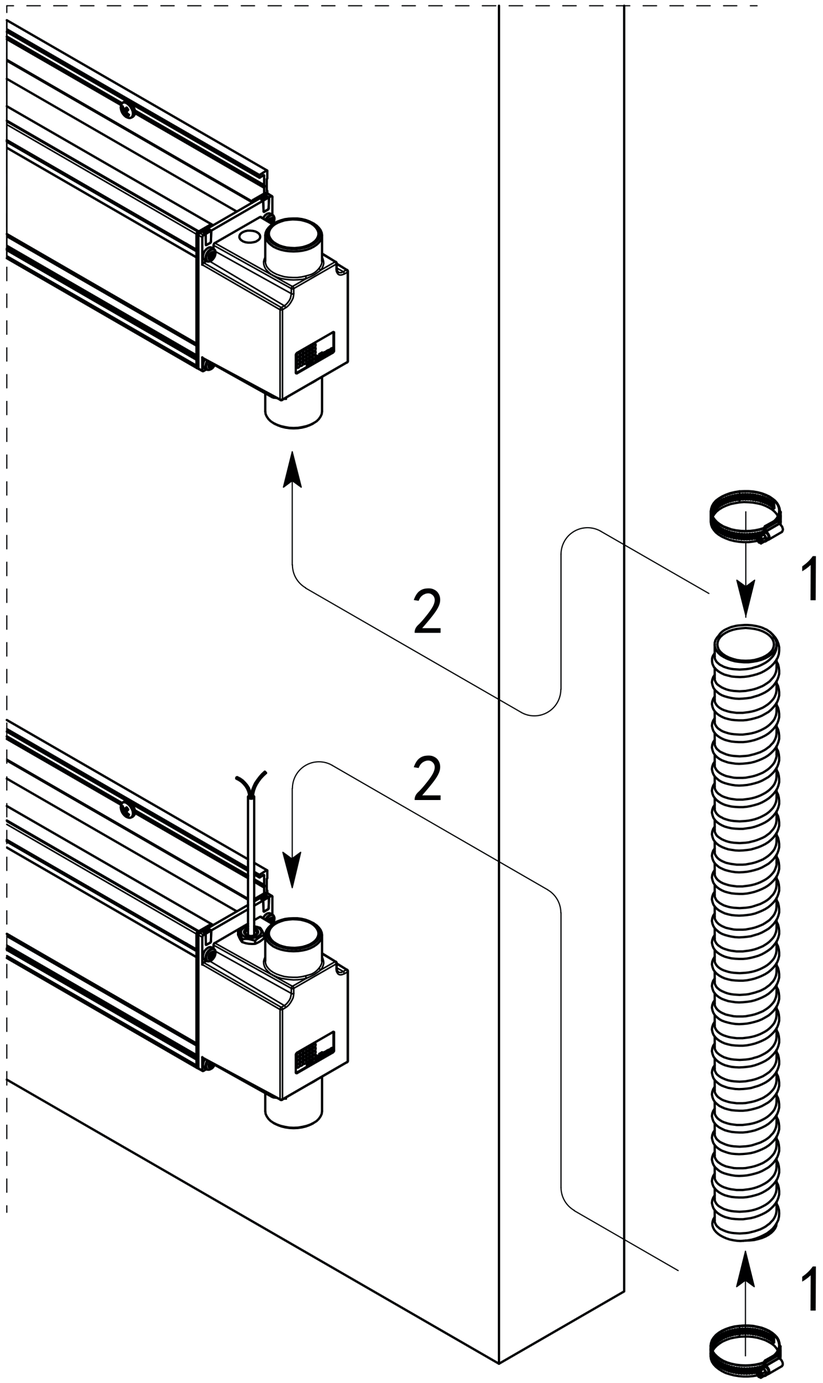

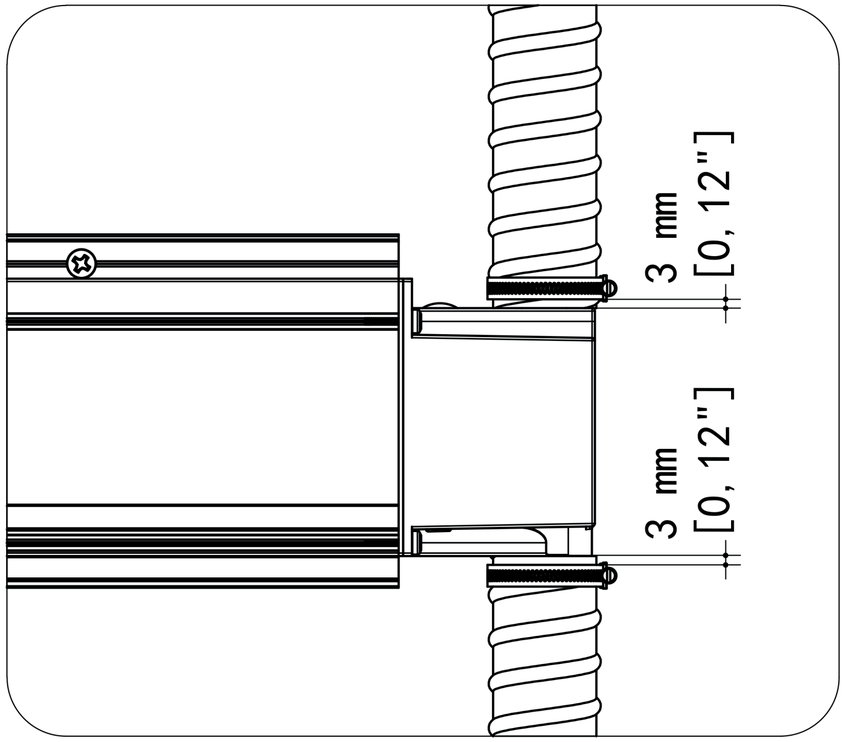

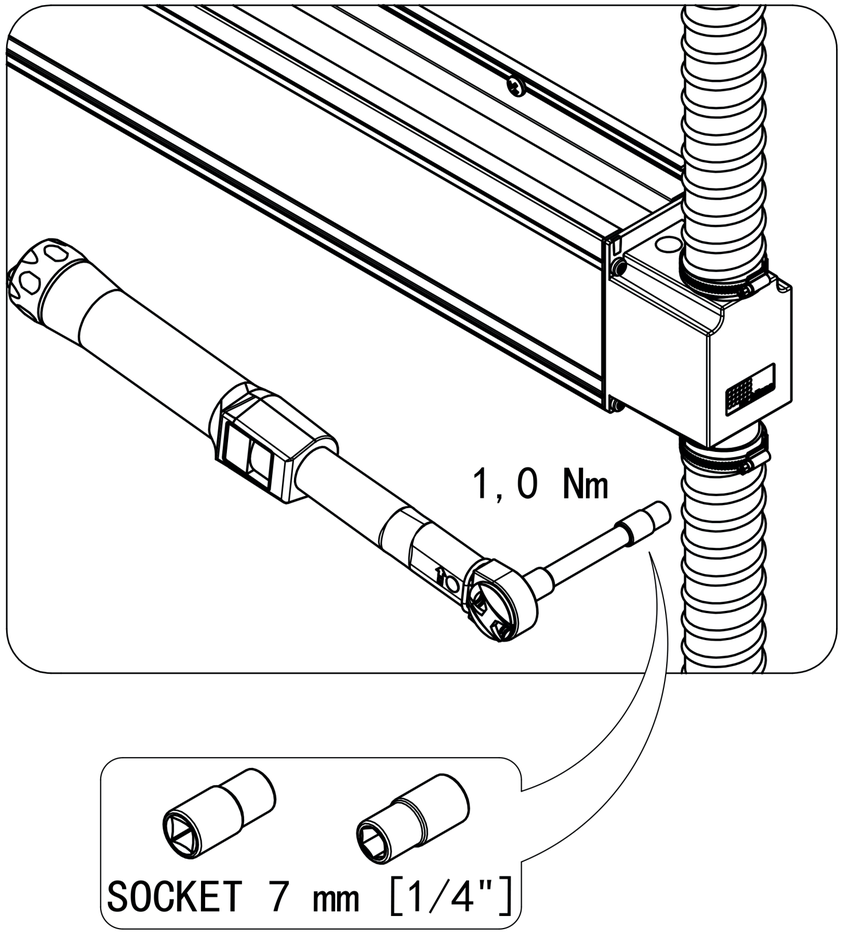

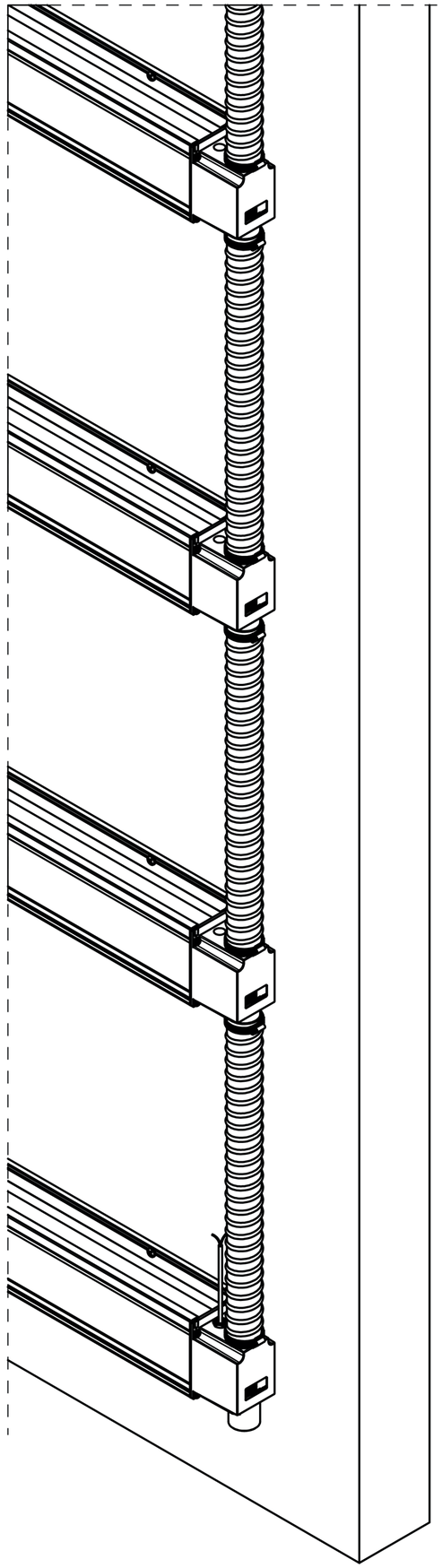

MOBILANE
BUILDING GREEN

5

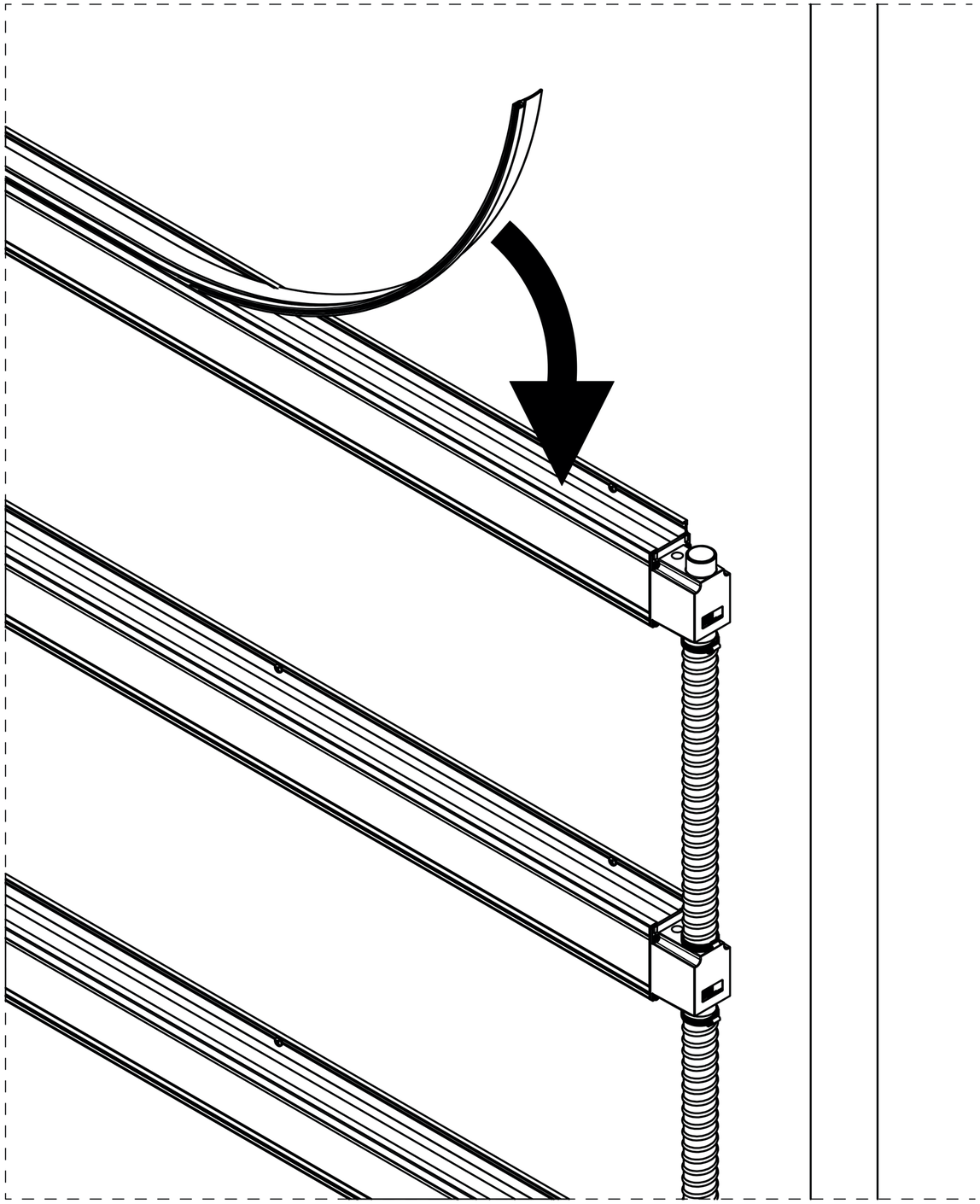

Optional use, only for outdoor without frame.

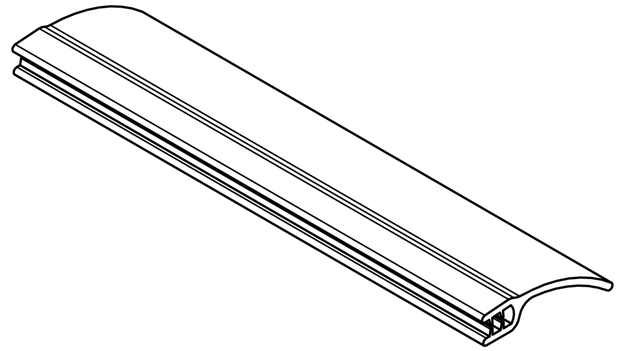

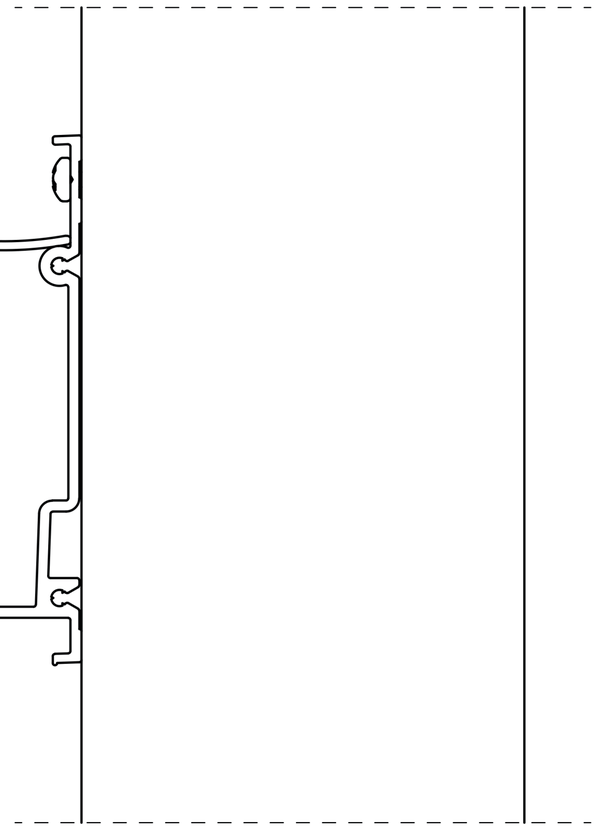

MOBILANE
BUILDING GREEN

6

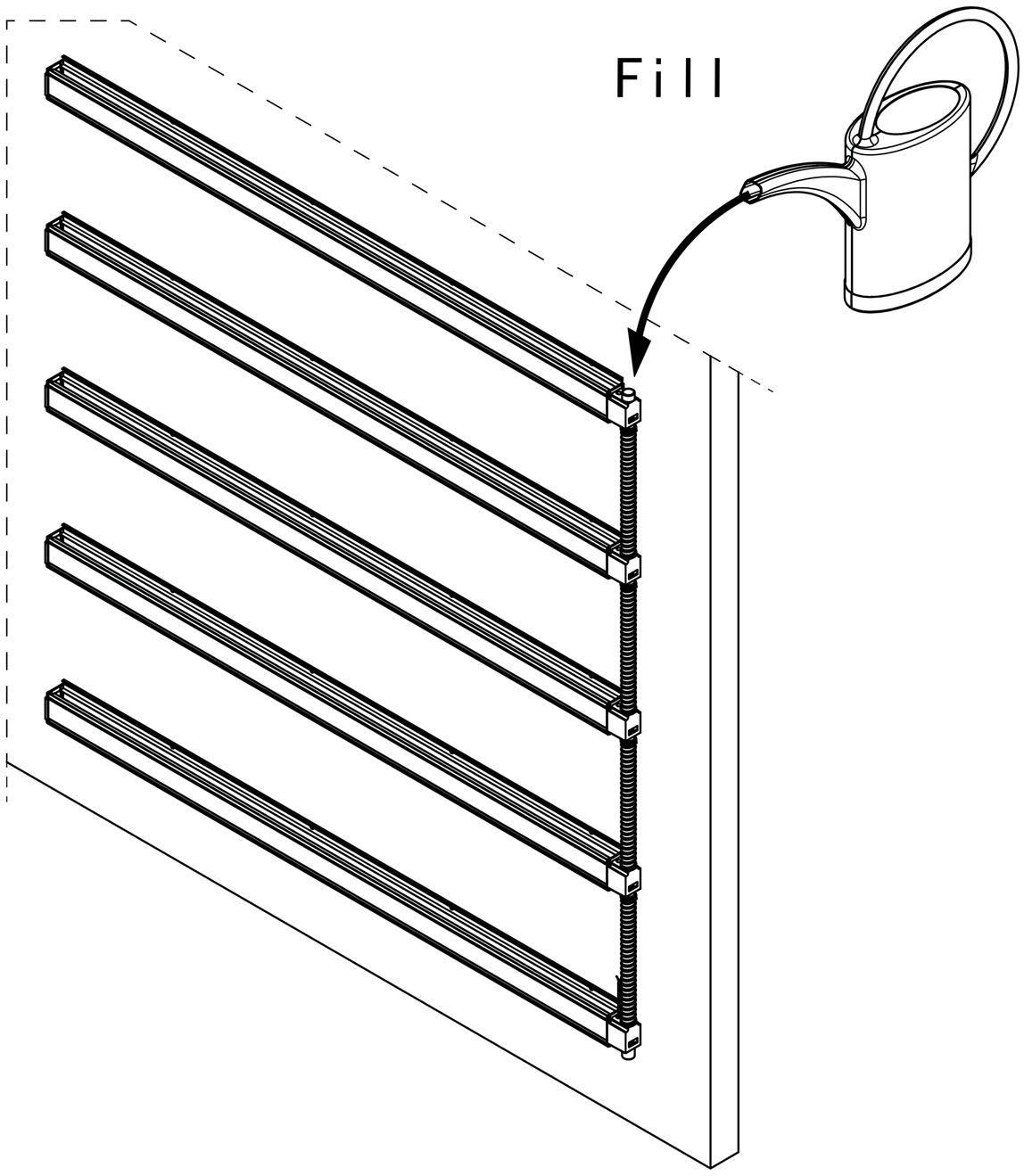

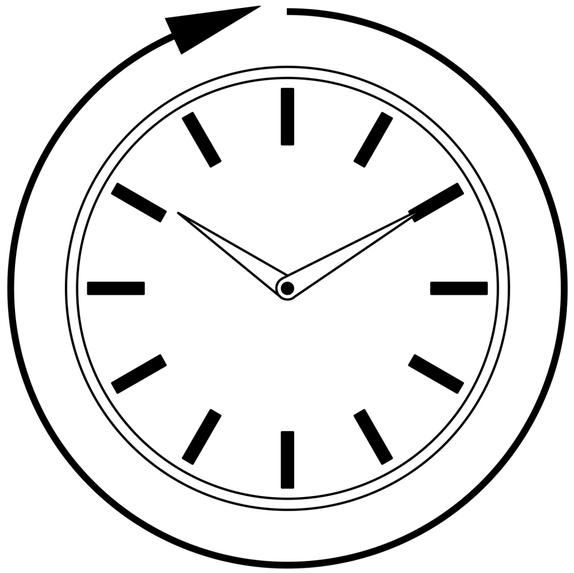

24 Hrs.

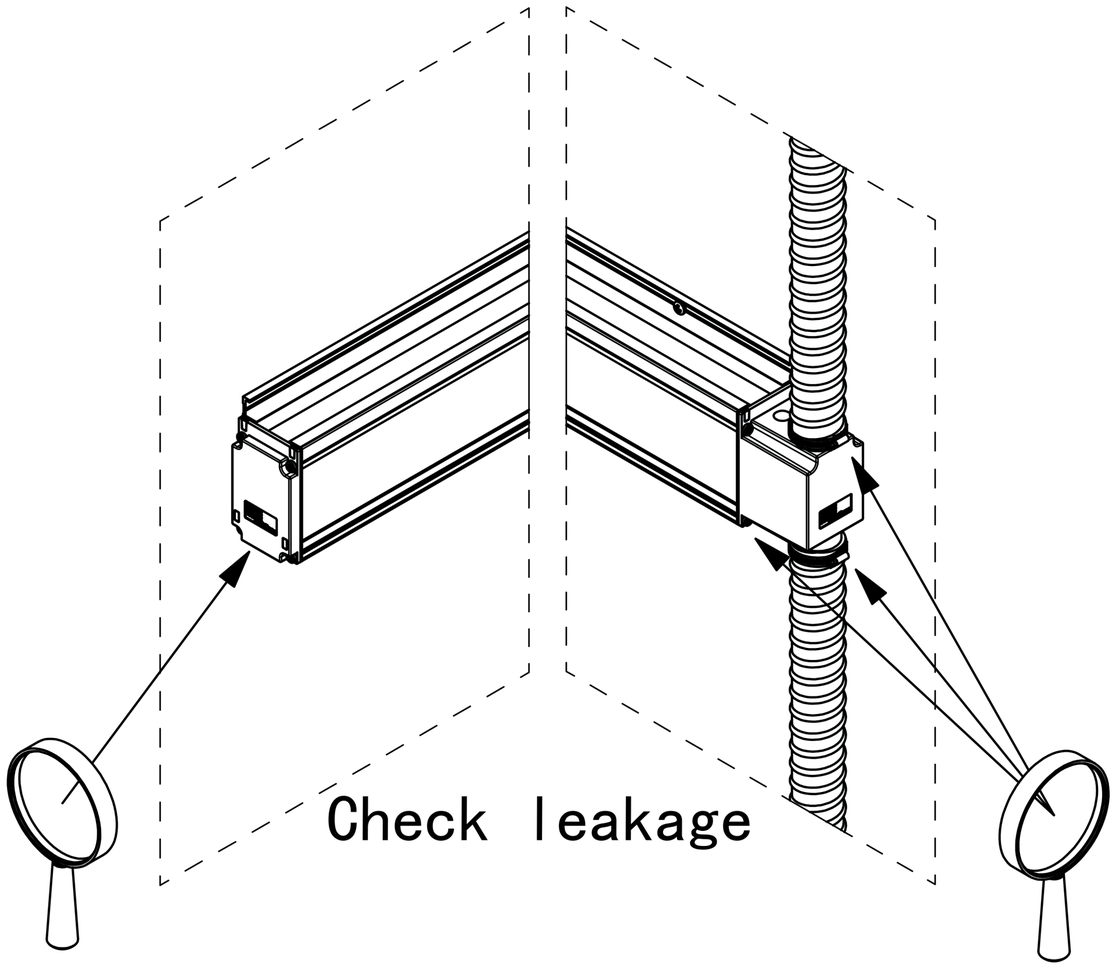

MOBILANE
BUILDING GREEN

7

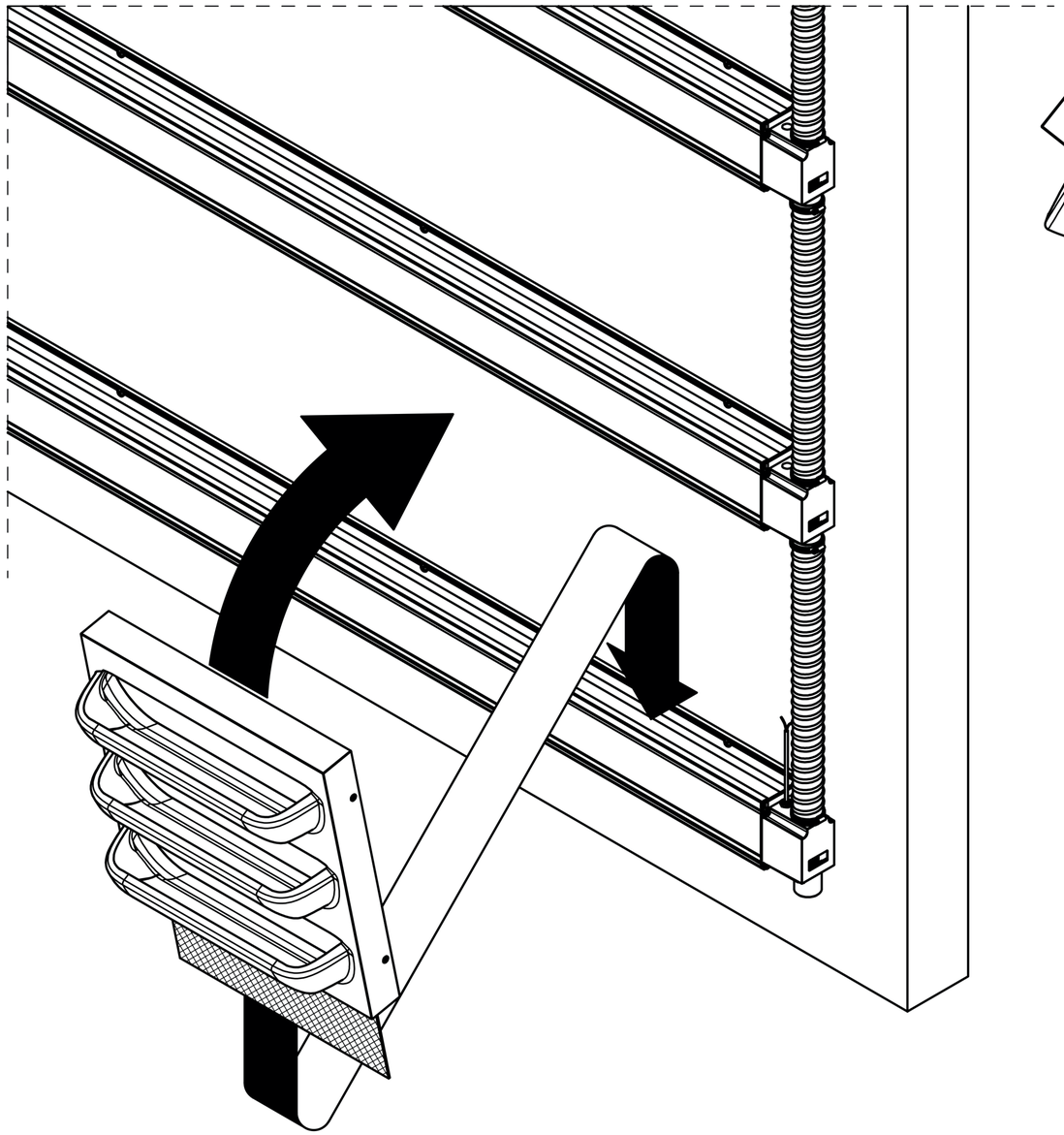

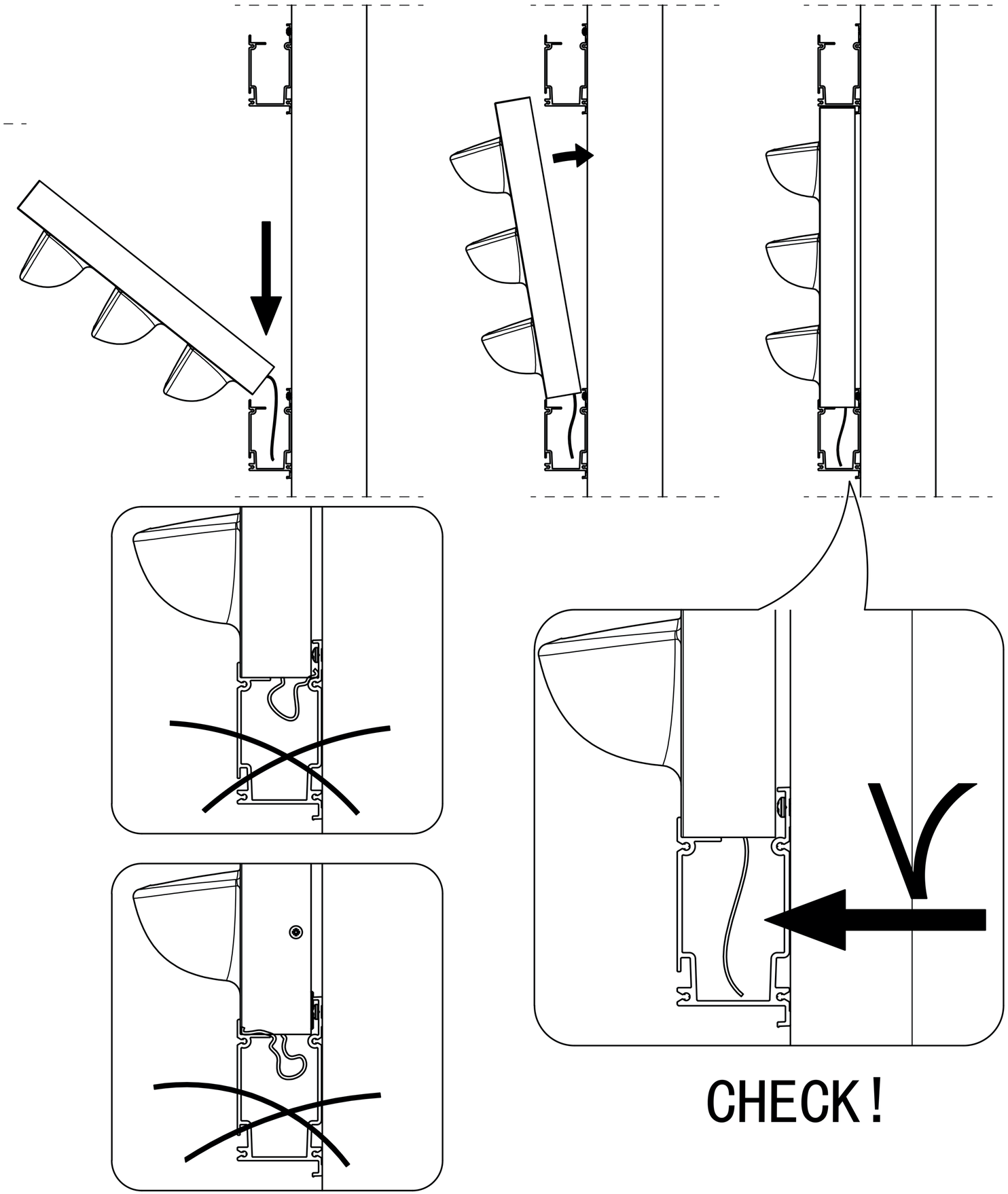

MOBILANE
BUILDING GREEN

8

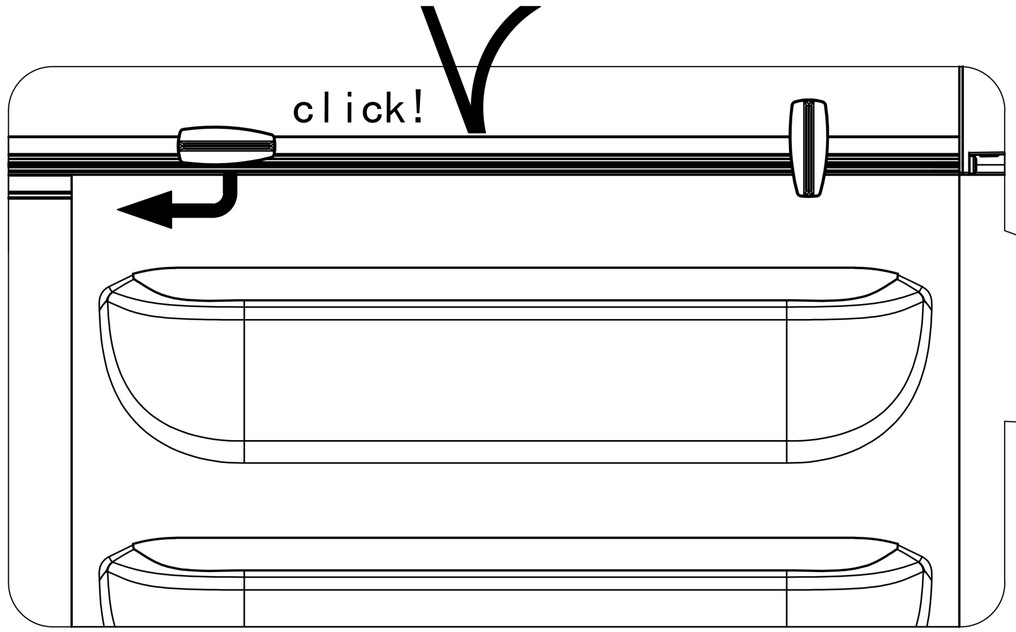

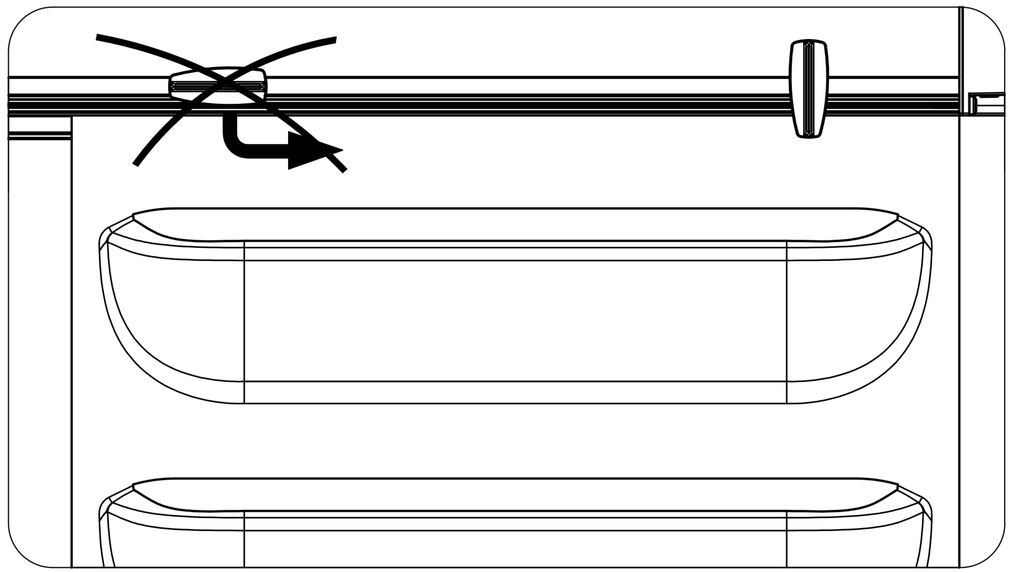

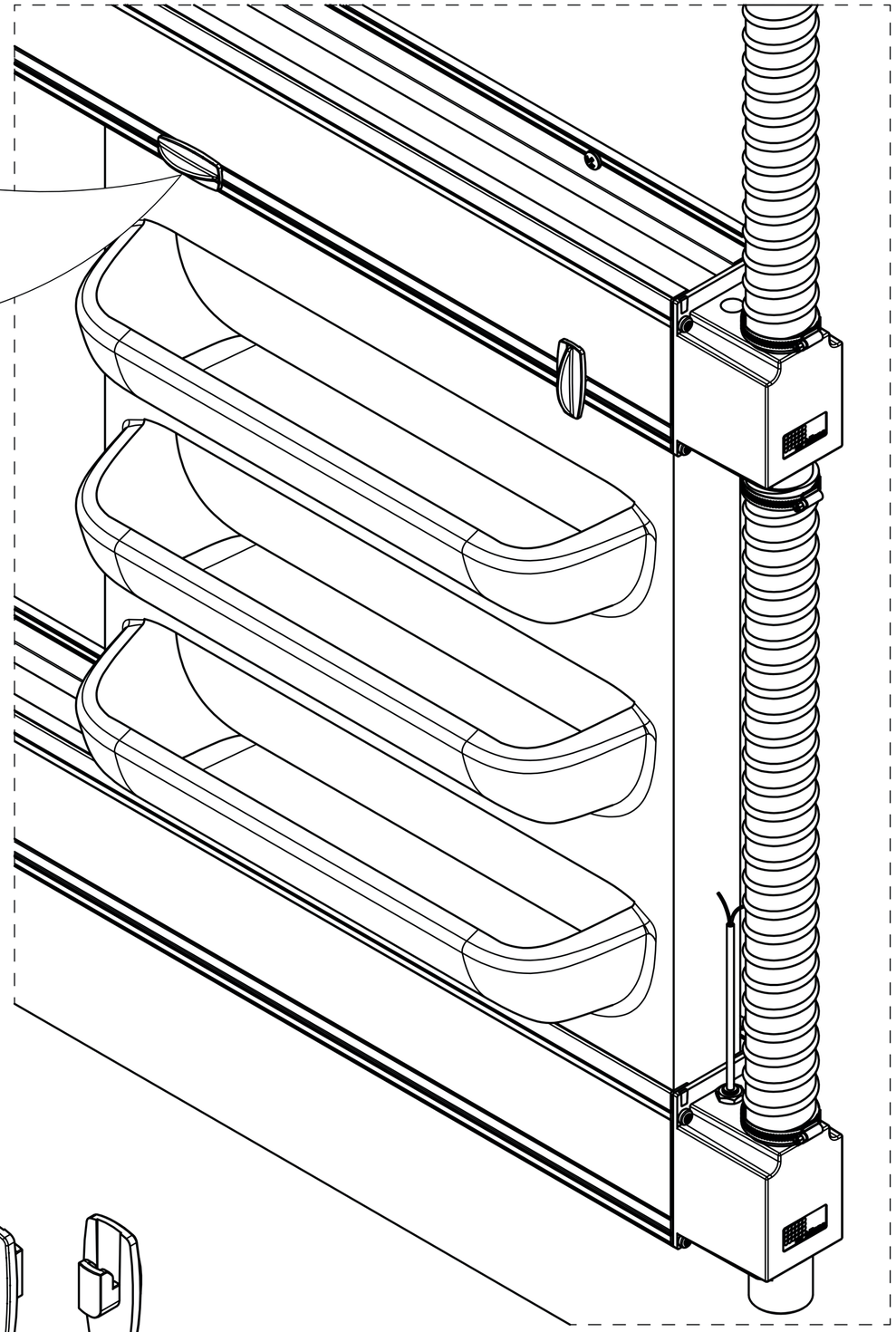

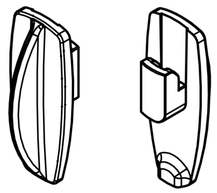

2x

MOBILANE
BUILDING GREEN

9A (OPTIONAL)

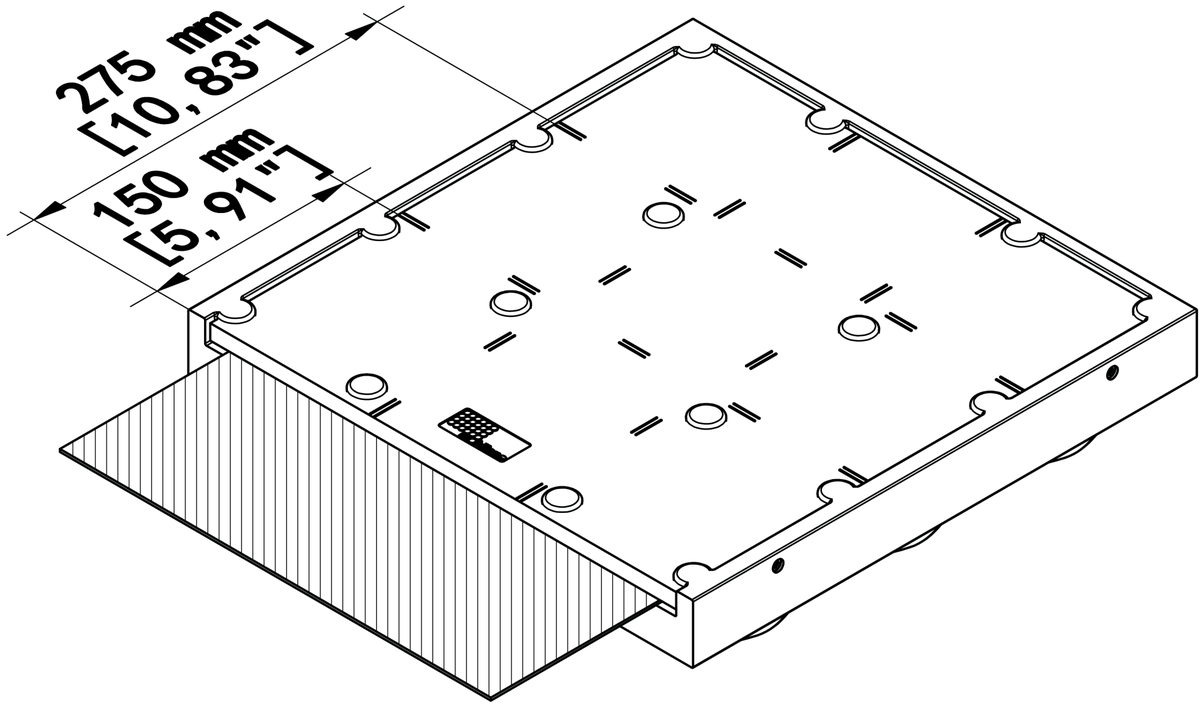

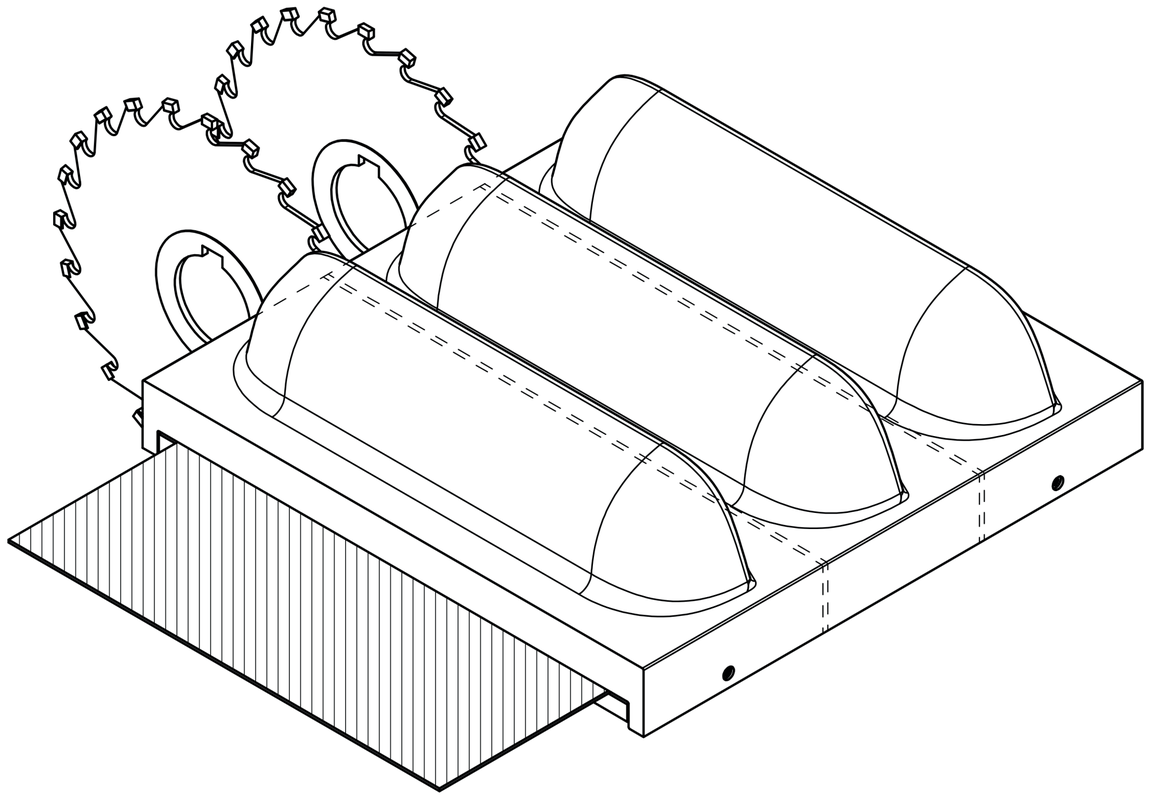

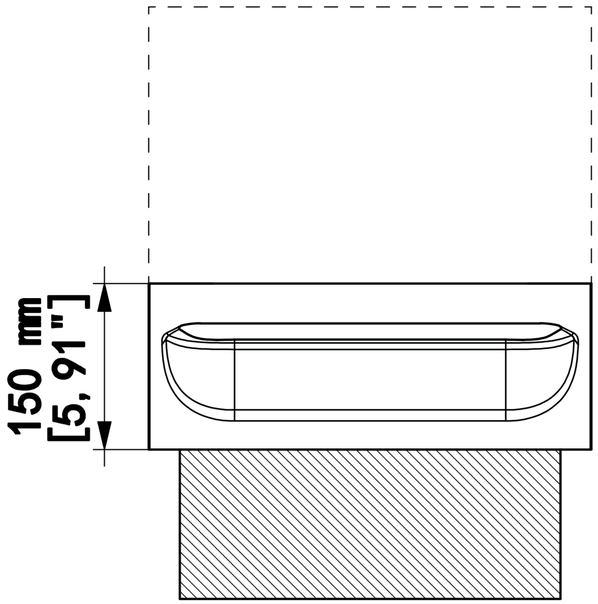

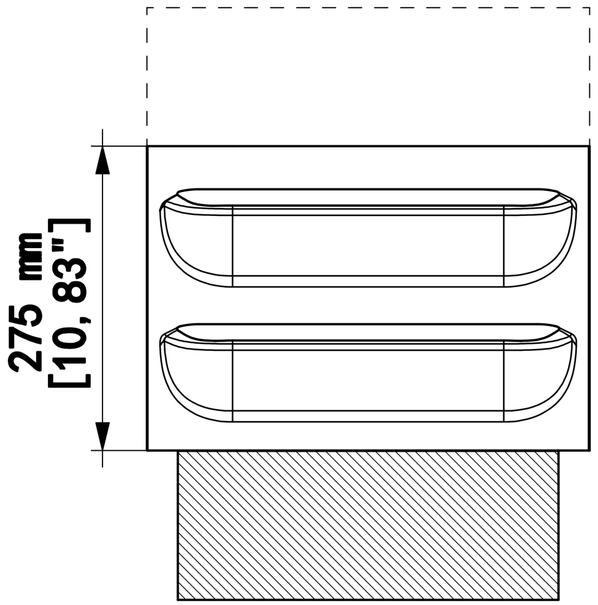

MOBILANE
BUILDING GREEN

Horizontal cassette parting options.

9B (OPTIONAL)

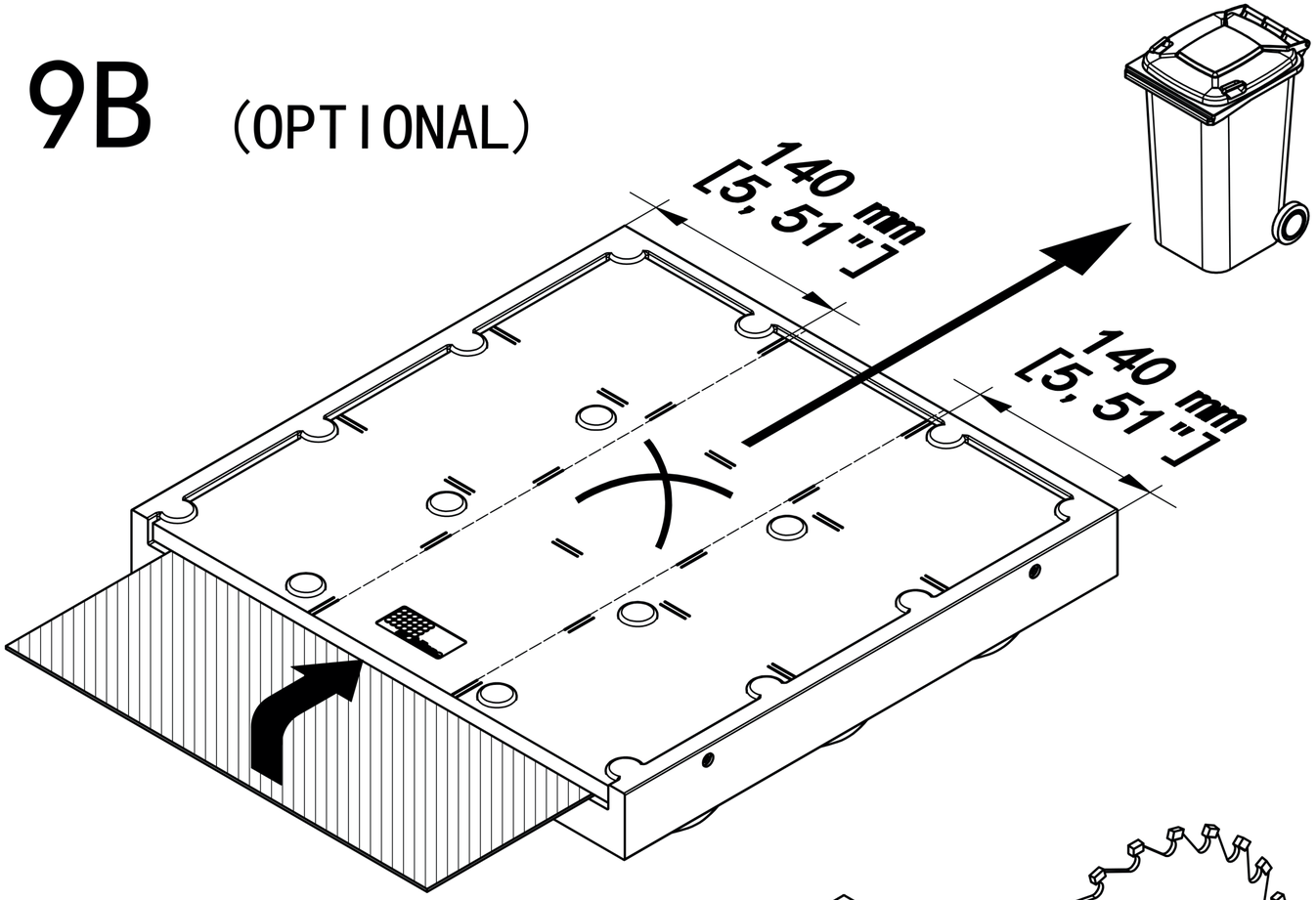

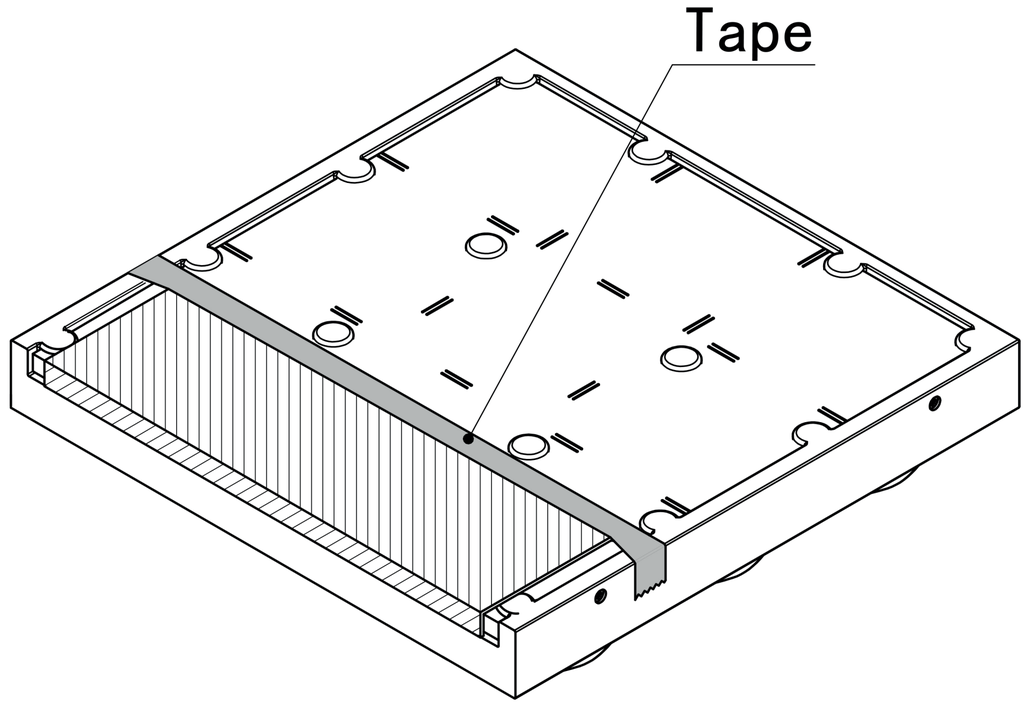

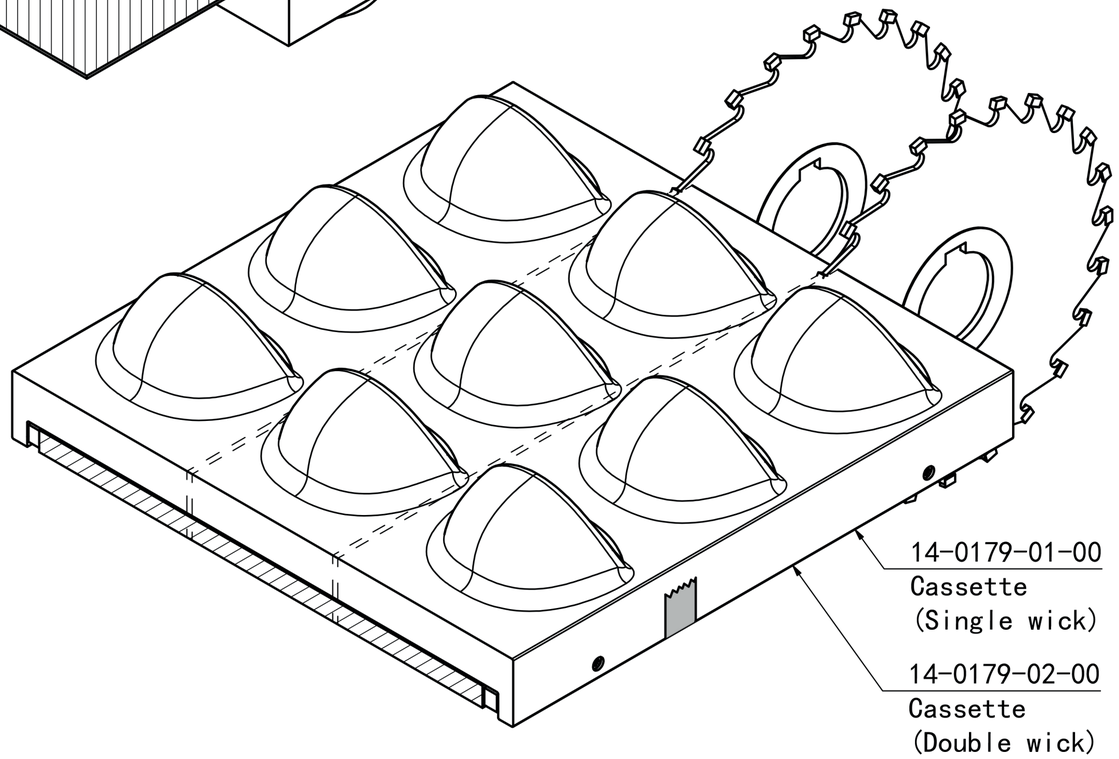

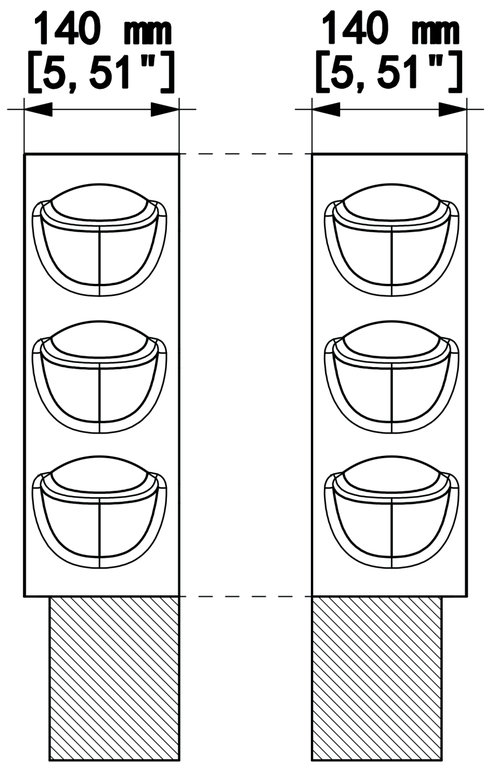

MOBILANE
BUILDING GREEN

Vertical cassette parting options.